LED 50W 3000K PFE-50 Cree XLamp (CXA1830)

Art. No.: E6508842

GTIN: 4026397581195

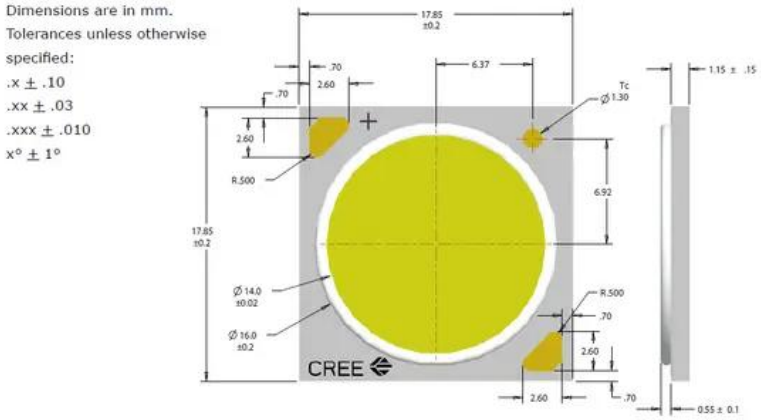

Features:

Technical specifications:

Scope of delivery:

Logistic

EAN / GTIN: 4026397581195

Eurolite®, Futurelight®, PSSO®, Roadinger®, Alutruss®, Europalms® and Dimavery® are trademarks of Steinigke Showtechnic GmbH, Andreas-Bauer-Straße 5, DE-97297 Waldbüttelbrunn
All rights reserved. Subject to change without notice. Errors and omissions excepted.Illustration only. Actual item may differ from photo.