LED COB 150W 8000K LED SL-160 Search Light (GT-FC150X3-1.1)

Art. No.: E6520041
GTIN: 4026397715132

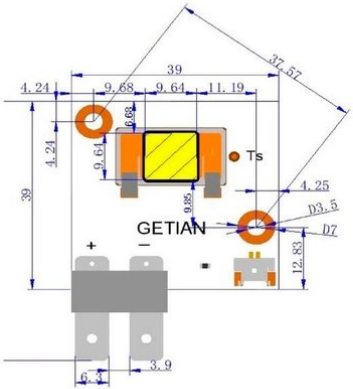

List price: 160.22 €

incl. 19% VAT.

All rights reserved. Subject to change without notice. Errors and omissions excepted.
Illustration only. Actual item may differ from photo.

LED COB 150W 8000K LED SL-160 Search Light (GT-FC150X3-1.1)

Art. No.: E6520041
GTIN: 4026397715132

Features:

All rights reserved. Subject to change without notice. Errors and omissions excepted.
Illustration only. Actual item may differ from photo.